I-M040-2C8J-3-GH84 Specification:

Model No:	I-M040-2C8J-3-GH84
Device:	AO Modulator
Interaction material:	AMTIR-1
Wavelength:	1550nm
Maximum CW Laser Power:	50W/cm^2
AR coating reflectivity:	< 0·3 % per surface
Transmission:	≥ 99·4 %
Drive Frequency:	40MHz
Optical polarisation:	Any
Active aperture:	2mm
Acoustic mode:	Compressional
Separation angle:	24·6mrad @ 1550nm
Rise-time (10-90%):	260ns/mm
Diffraction efficiency:	≥ 85% with random polarisation
Maximum RF power:	1W
VSWR	≤ 1·2:1
Impedance	50Ω nominal
Housing:	Refer to drawing

Schematic drawing

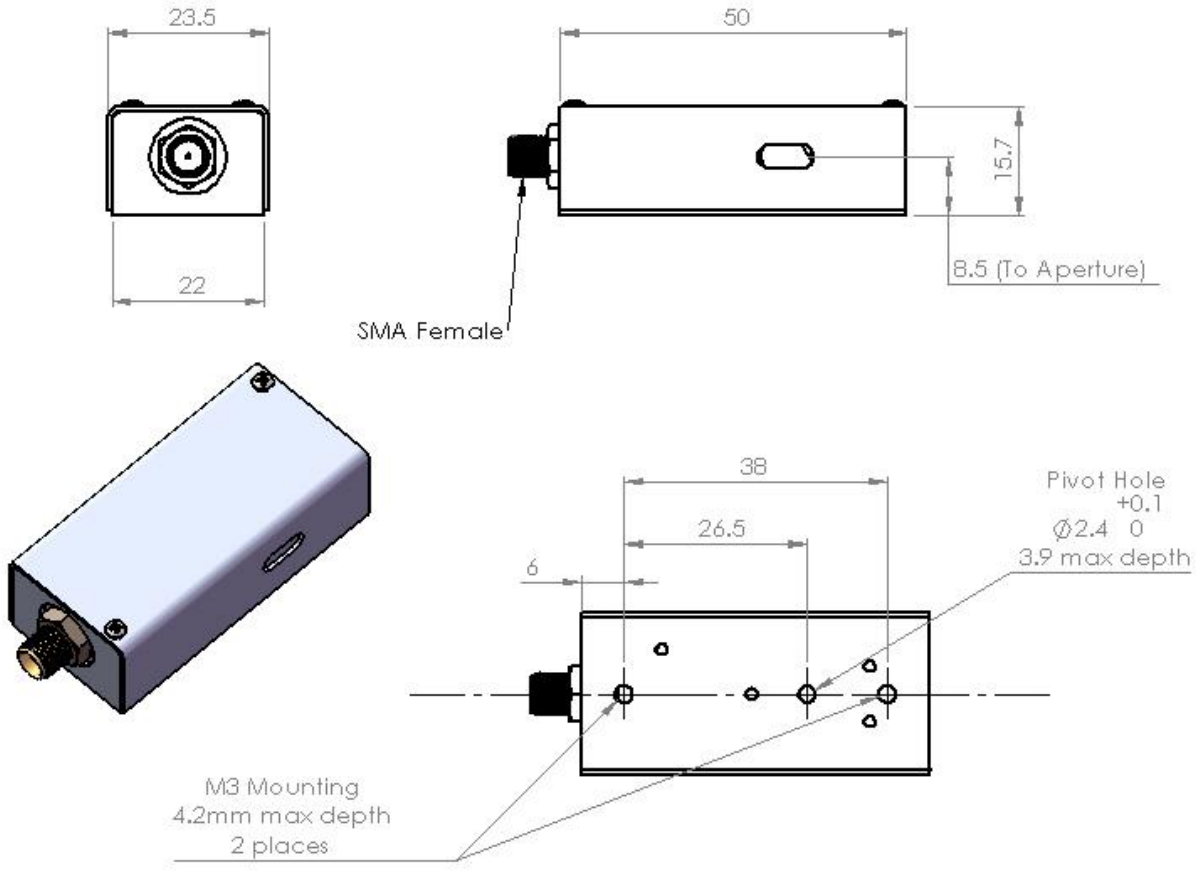

Revision No: 1.2
Date: 30/11/2016

As part of our policy of continuous product improvement we reserve the right to change specifications at any time